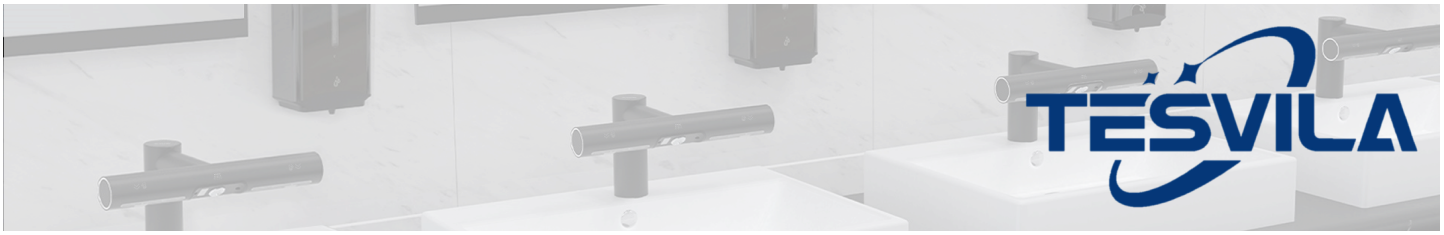

Tesvila T-20

T Series Floor Mounted Toilet Bowl

Features:

- **Bidet Feature**
- **Tankless Design**
- **Silent Soft Close**
- **Vortex Jet Siphon Type**
- **No need battery or plug**

Specifications:

Flush System	: Vortex Jet Siphon flushing
Available trap	: S-trap 250MM
Dimension	: L 680 x W 385 x H 500MM
Method of flush	: Top Flushing / Side Flushing
WELS Rating	: 2 Ticks √√ (full flush ≤4.0L, half flush ≤3.0L) / 3 Ticks √√√ (full flush ≤3.5L, half flush ≤2.5L)

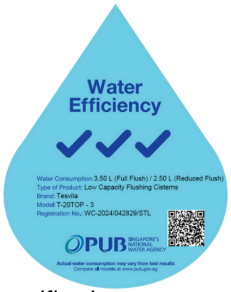

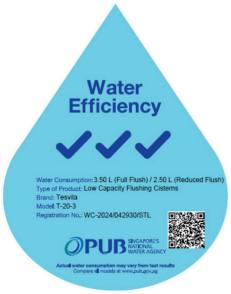

Technical Drawing Specification:

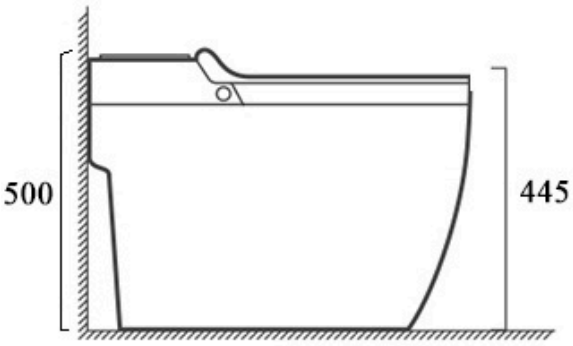

SIDE VIEW

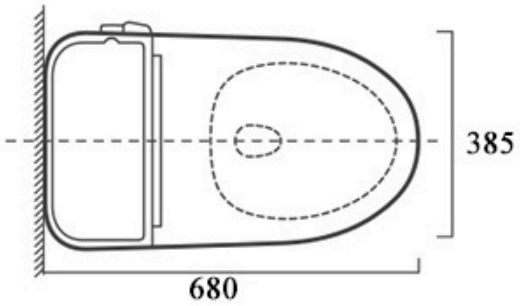

TOP VIEW

Unit: Millimeter

All rights reserved by Tesvila. Specifications and sizes are subject to changes without prior notice.